Neata® Super energy

Lithium Battery Series

LFP12200(12V200AH)

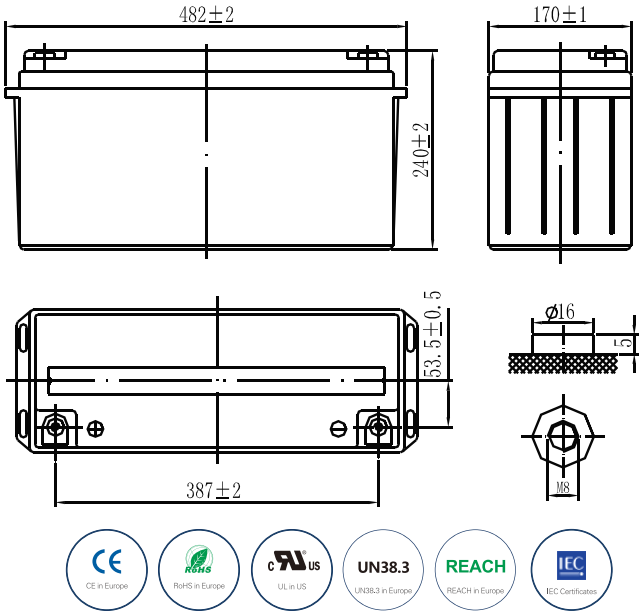

Lithium Series Batteries provide superior performance, capacities and reliability. Using state of high power cell technology the lithium series is designed for environmentally sensitive areas that require enhanced cycle life capabilities in commercial, industrial, residential, and private applications. The maintenance free construction and advanced design features makes the lithium Series the definitive choice for a wide variety of markets; Solar and Renewable Energy Storage; Electric Vehicle and Golf cart; Industrial equipment, Floor Machines,Forklifts, Aerial lifts, and Robotics; Marine, RV,and no-idle solutions; Mobility and Medical Equipment; Telecom, Broadband and Cable TV; UPS systems.

Applications



BATTERY SPECIFICATIONS

Battery Type - Chemistry	LiFePO4	Internal Resistance - Milliohms	< 50 mΩ
Nominal Voltage	12.8 V	Efficiency - round trip	> 99.5 %
Amp Hour Capacity	200 AH	Self Discharge per Month	< 3 %
Energy Density	2560 Wh	Max 4 - series connections	12-48 V
Dimensions(LxWxH)	483*170*240 mm	Parallel connections	No Limited
Weight	22 KGS	Case IP Rating	IP50
Terminal Type	M8	DesignLife	20 Years
Terminal Torque	12.4 NM	Cycle Life (1C, 25℃@80%DOD)	>4000 cycles
Case Material	ABS	Cycle Life (0.2C, 25℃@80%DOD)	>6000 cycles
BMS build-in	Yes		
		Discharge Temperature	(-23 to 65) ℃
Recommend Charge Voltage	14.2 ±0.20V	Charge Temperature	(-3 to 65) ℃
Max Charge Voltage	14.8 ±0.20V	Storage Temperature	(-20 to 45C) ℃
Recommend Charge current	50 A		
Max Charge Current	200 A	Bluetooth(APP)	Optional
Charge Current (0 to -10℃)	<0.1 C	LCD Screen	Optional
Charge Currrent (-20 to -10℃)	<0.05 C	Heating functions -20°C	Optional By Charger
Recommend Discharging voltage	11.8 ±0.20V	Batteryself heating function	Optional BY Cell
Max Discharging Voltage	9.6 ±0.20V		
Max Discharge Current	200 A	Shipping Classification	UN3480, CLASS 9
Pulse Discharge Current	250 A±3S	Other Certifications	CB /CE

©2021 Neata.All right reserved.
Subject to revisions without prior notice

Neata® Super energy

Lithium Battery Series

LFP12200(12V200AH)

BMS SPECIFICATIONS

BMS Version :LL

BMS Protections Range:	Over (Voltage, Current, Temperaturemanagement) and cell balance					
Over Charging Cell protection	>3.80	±0.05V	Delay		2 ±0.5S	
Over Charging Pack protection	>14.8	±0.20V	Delay		2 ±0.5S	
Over Charging Current 1	>200	±2.0A	Delay		15 ±2.0S	
Over Charging Current 2	>220	±2.5A	Delay		2 ±1.0S	
OverCharging Temp Protection 1	<-0 or>65	±3℃	Release	>3 or < 60	±3℃	Delay:2±0.5S
Over Discharging Cell protection	<2.1	±0.05V	Delay		2 ±0.5S	
Over Discharging Pack protection	<9.6	±0.20V	Delay		2 ±0.5S	
Over Discharging current 1	>205	±2.5A	Delay		15 ±2.0S	
Over Discharging current 2	>250	±2.5A	Delay		3 ±1.0S	
Over Discharging current 3	NA					
Over Discharging Temp Protection 1	<-20 or>65	±3℃	Release	>-15 or < 60	±3℃	
PCB Temp protection	>95	±3℃	Release	< 75	±3℃	Delay:2±0.5S
Cell Balance Start	3.5	±0.05V				
Balance Current	150	±20mA				
Short circuit	Load Short circuit		Delay		1 ±0.5ms	
Power consumption	<300	uA	Switch-off mode		Storage & transportation	
	<500	uA	Sleep mode		Protection & stand-by	
	<15	mA	Operating mode		Operating	
	<28	mA	Operating mode		Low voltage to start Pre-charge	
Communication ports	Opitional for CAN/Bluetooth/RS485/Dryport/SNMP				Can be customizeddevice	
Temperature accuracy	±2	℃	Measuring range -40~100℃			
Voltage accuracy	±20	mv	For cells and module			
Current accuracy	FSC	±5%	Measuring range -200~+200A			
SOC	±5%		Integral calculation			

Different DOD Discharge Cycle Life Curve 1C 25C

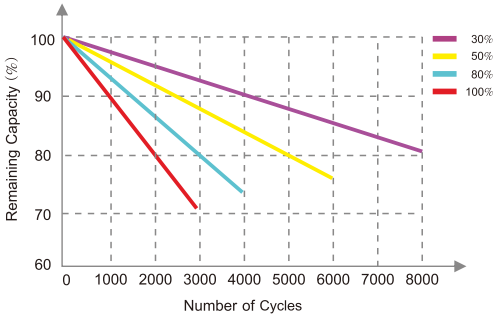

Different Temperature Discharge Curve(0.2C)

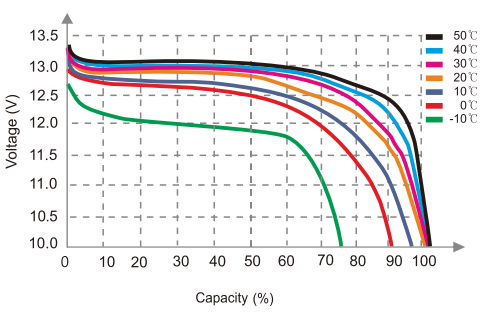

State of Charge Curve(0.5C, 25℃)

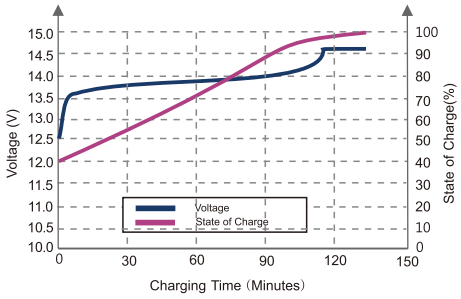

©2021 Neata.All right reserved.
Subject to revisions without prior notice